ID-COOLING
Ideas To Make A Difference

RGB CONTROL SET GUIDE

Motherboard RGB Sync Compatible

- ☐ Asus Aura Sync
- ☐ Gigabyte RGB Fusion
- ☐ Msi Mystic Light Sync
- ☐ Asrock RGB LED

RGB Control With RF Control

- ☐ 22 Dynamic Modes
- ☐ Dynamic Speed Adjustable
- ☐ 20 Static Colors
- ☐ Static Color Adjustable

Motherboard RGB Sync

CAUTION

Wrong connection will damage the device and cause mal-function!

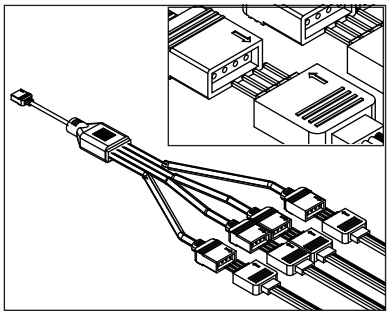

Connect the fans' RGB header to the RGB Hub Wire. Please make sure the pin with Arrow connects to the one with Arrow too.

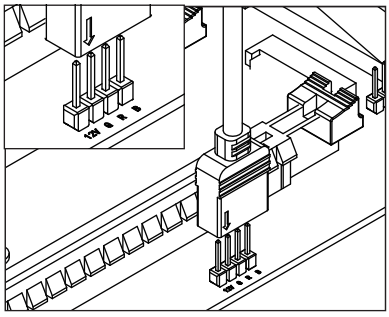

Connect the single header of RGB Hub Wire to the Motherboard RGB Header. Please make sure the pin with Arrow connects to the pin indicates 12V.

Download RGB Sync software that is compatible with your Motherboard and adjust RGB color and mode in the software.

RGB Control With RF Controller

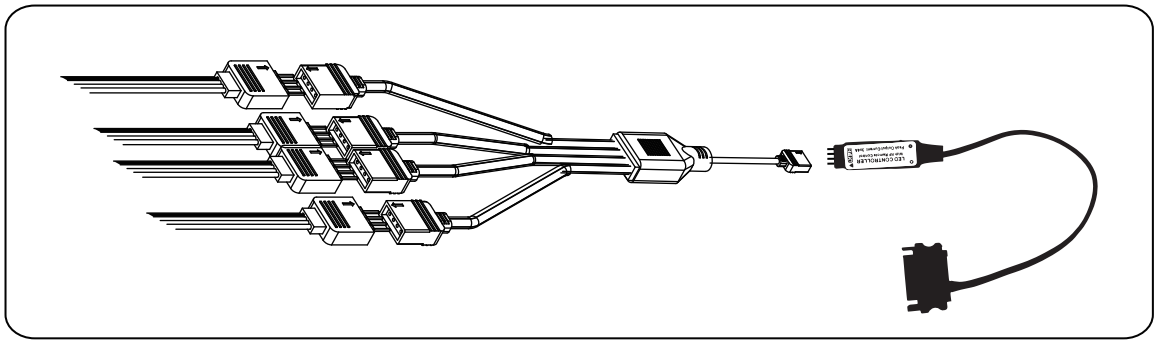

1. Connect the fans' RGB header to the RGB Hub Wire. Please make sure the pin with Arrow connects to the one with Arrow too.
2. Connect the single header of RGB Hub Wire to the RF Control Receiver. Make sure the pin with Arrow connects to the pin indicates 12V.
3. Power the RF Control Receiver by SATA power connector.

Press these 2 buttons to switch into dynamic mode. There are 22 different dynamic modes available.

During dynamic mode, press these two buttons to adjust dynamic playing speed.

Press these 2 buttons to switch into a static color mode. There are 20 different static colors available.

During static color mode, press these two buttons to adjust color brightness.

Press this button to switch into Demo mode. At demo mode, the unit will play 17 dynamic modes in loop, and each mode repeats 3 times.

Press this button to turn on/off LED lighting.

1. Please ask for professional to help if you don't how to install.
2. Make sure you're working on a power-off PC.
3. If you have any doubt about componets list or product itself, please contact your original reseller/retailer.
4. ID-COOLING is always ready to offer our support. You can see below contact information.
5. Descriptions are for your reference. Different models may vary in terms of componets list.

ID-COOLING
Ideas To Make A Difference

ID COOLING LIMITED

www.idcooling.com
support@idcooling.com
www.facebook.com/idcooling.global
www.twitter.com/idcooling